McPHERSON
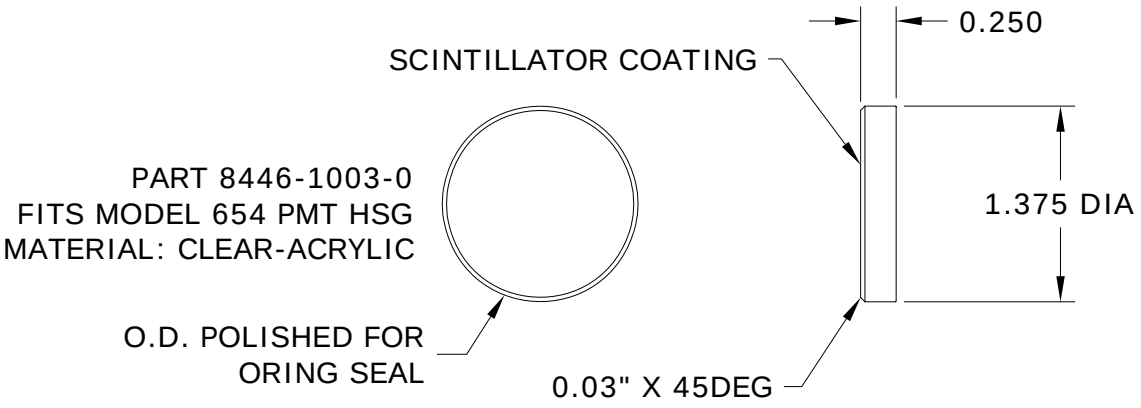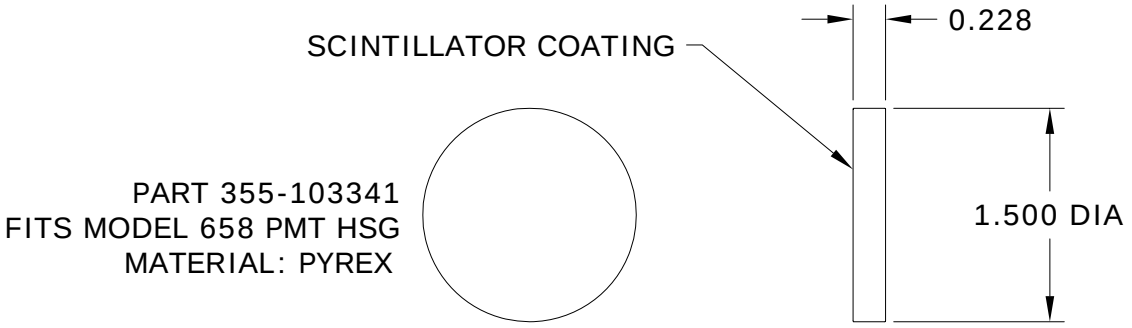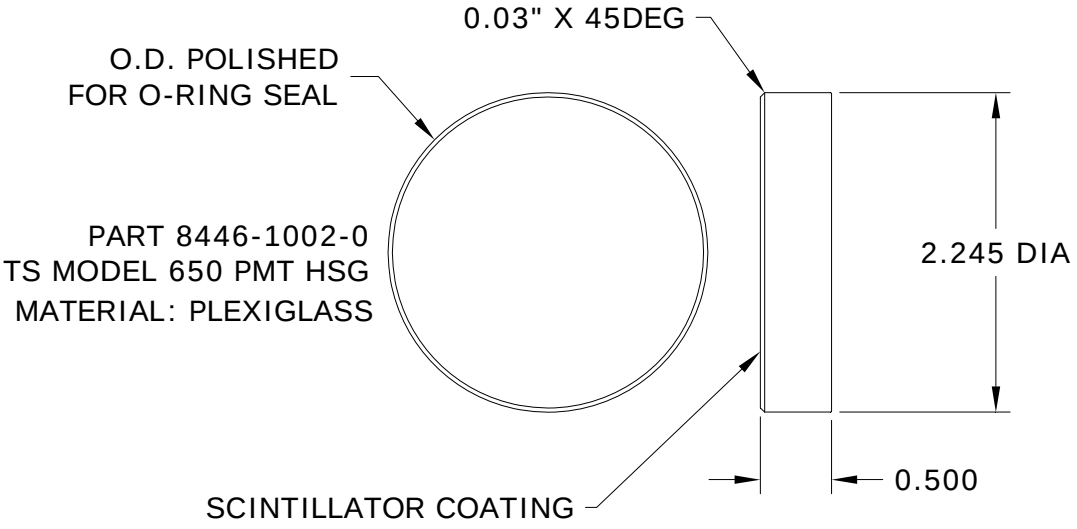
Replacement Scintillator Windows